COLOURWASH
BATHROOMS

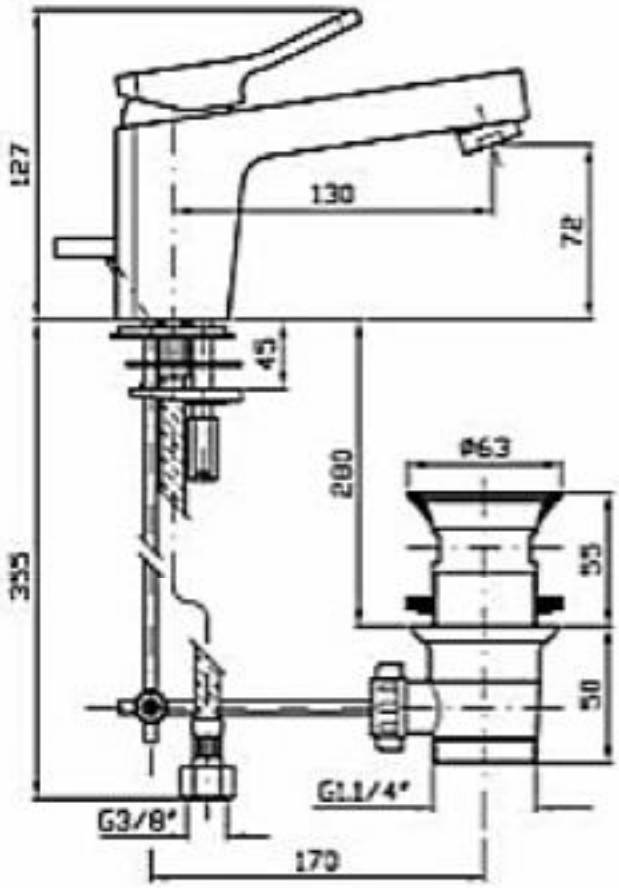

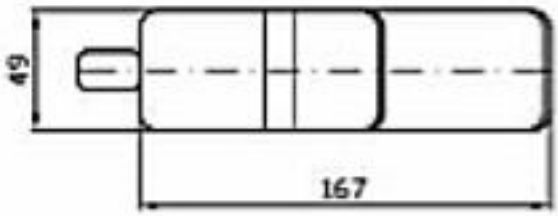

E&OE
Errors and ommissions excepted

This drawing is given as indication of the product specification; in the interest of continuing design, development and product improvement the manufacture or supplier or Colourwash reserve the right to change colour, designs and product specifications without prior notice.