Simply COLOURWASH

Product Dimension

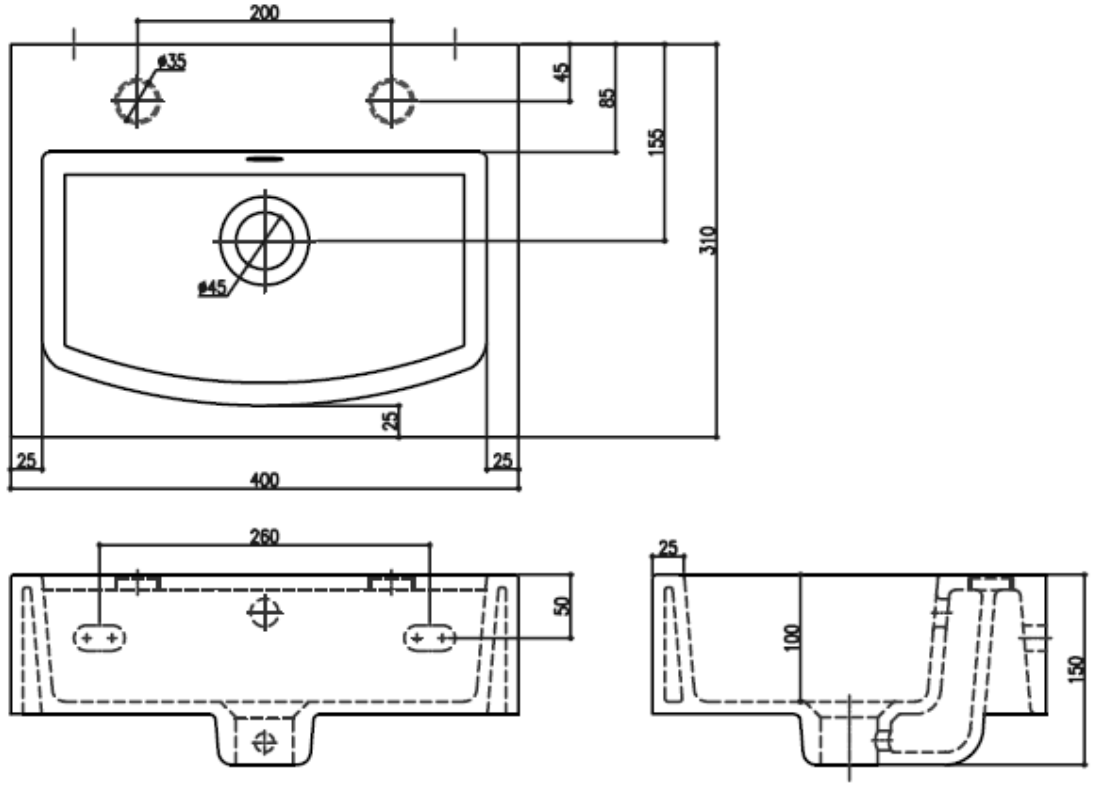

E&OE

Errors and omissions excepted
This Drawing is given as indication of the product specification; in the interest of continuing design, development and product improvement the manufacturer or supplier or Colourwash reserve the right to change colour, designs and product specifications without prior notice.